FIG.31A

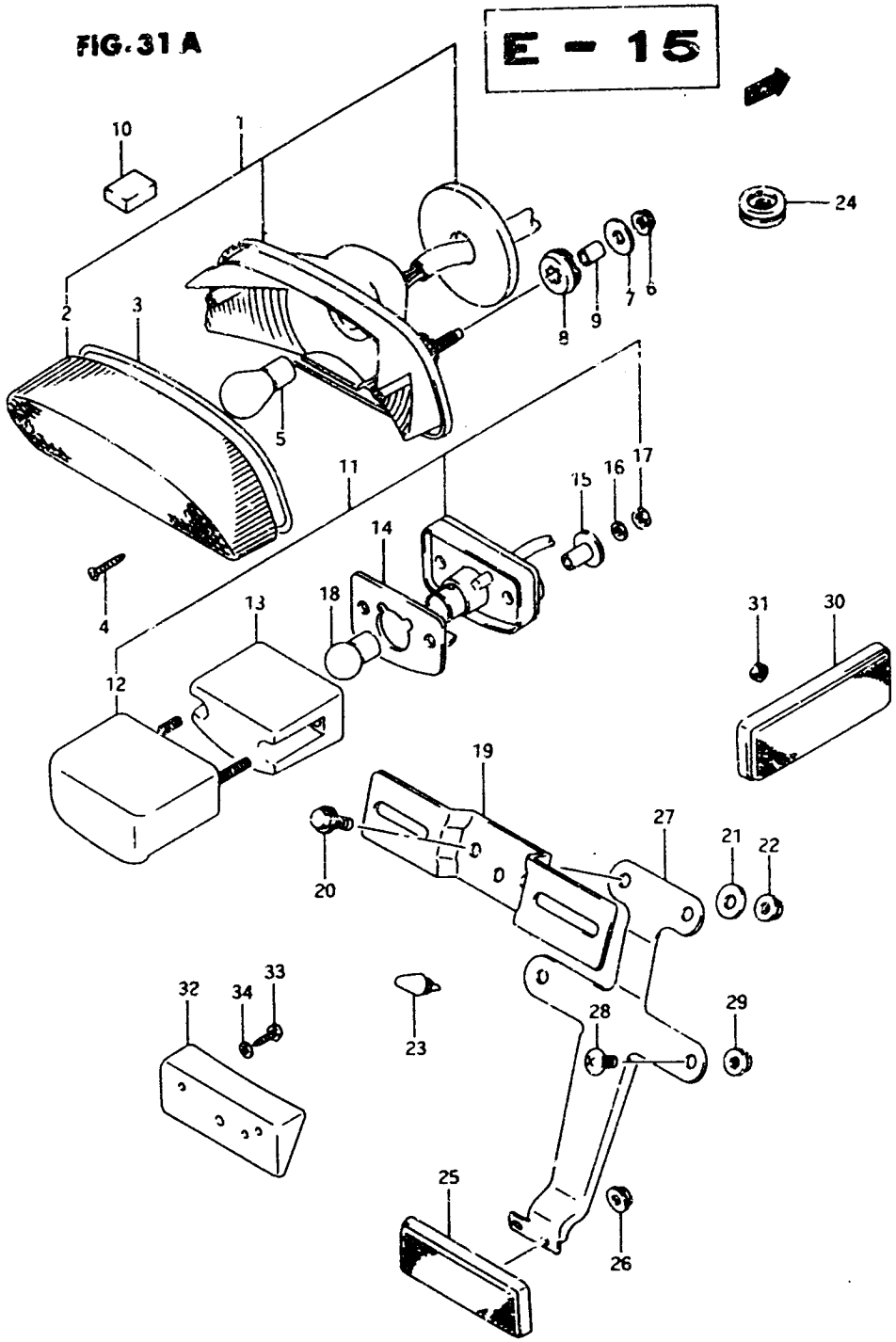

FIG.31A(E-15) REAR COMBINATION LAMP (model P/R)

REF.NO.	PART NO.	DESCRIPTION	Q'TY	REMARKS
30	35950-43431	REFLEX REFLECTOR, rear side	2	E18
31-1	08310-22055	NUT	2	model P E18
31-2	08310-00053	NUT	2	model R E18
32	35977-12000	SPACER	1	
33-1	03541-04125	SCREW	2	model P
33-2	03541-04123	SCREW	2	model R
34	08322-21045	WASHER	2	model P

AIR CLEANER C-8
BATTERY E-4
CAM CHAIN B-13
CYLINDER B-6
CYLINDER HEAD B-2
ELECTRICAL E-5
FUEL COCK F-10
FUEL TANK F-8
OPTIONAL H-12
PROPELLER SHAFT D-9
RADIATOR C-10
SEAT F-11
SECOND DRIVE GEAR D-6
SPEEDOMETER F-6
WIRING HARNESS E-16